FPIX0 Readout Timing (using FPRB0 outer board)

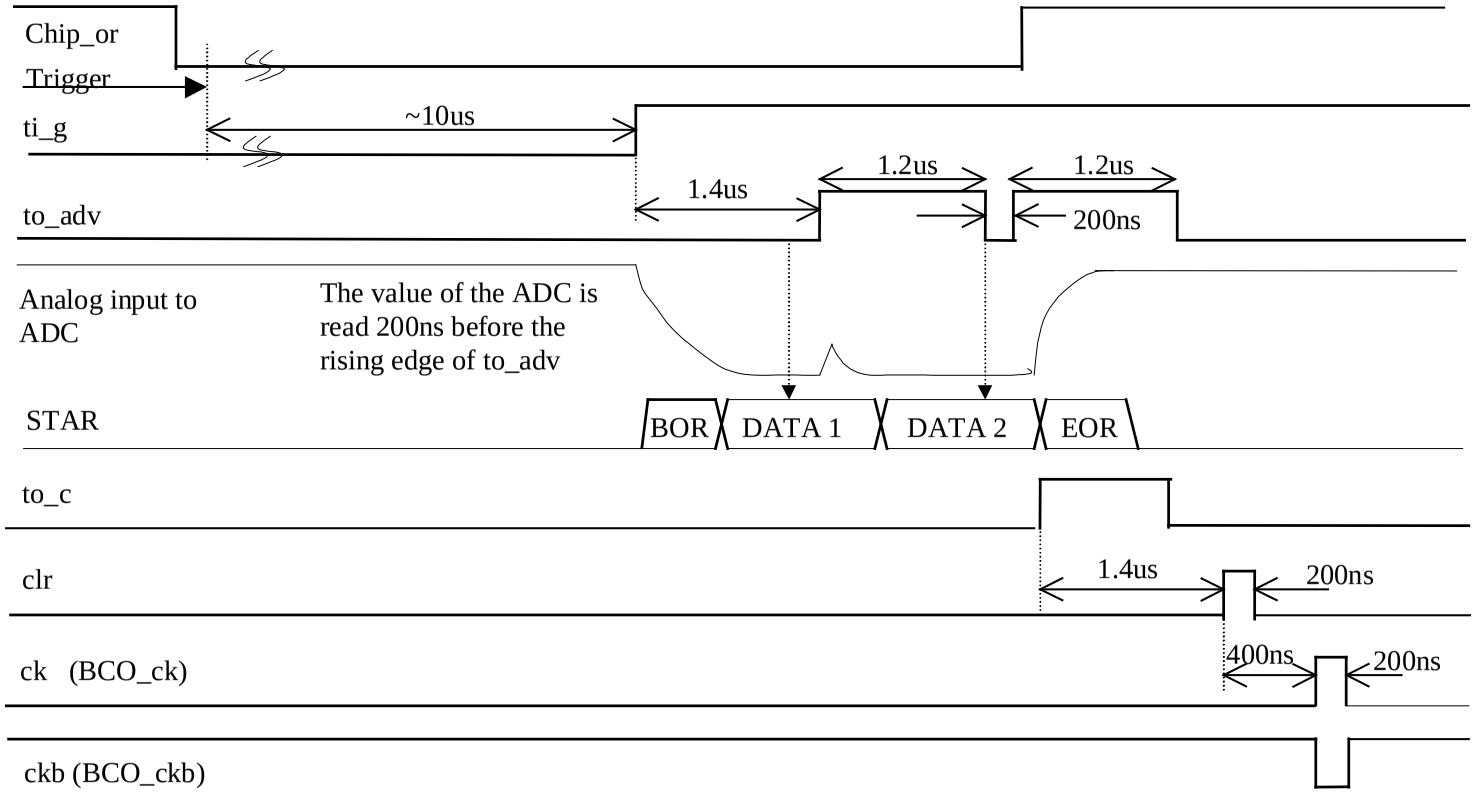

Guilherme Cardoso 3/12/99